SHRACHI®
Agrimech
Khushali Hamesha

OWNER'S MANUAL

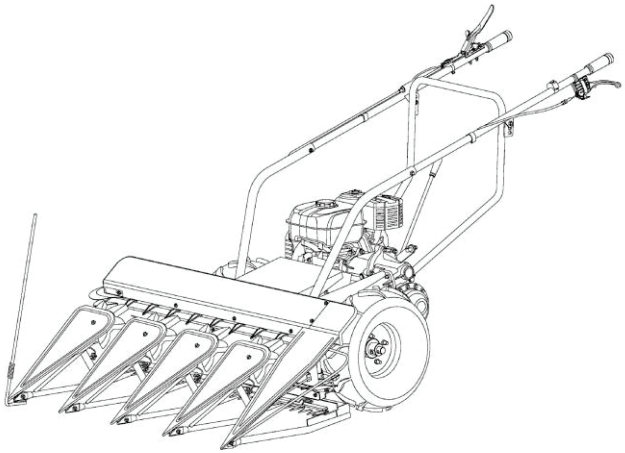

SHRACHI 4R-P POWER REAPER

www.shrachiagrimech.com • 9163220000 • btlmktg@shrachi.com

Chapter 1 Safety Precautions and Warnings

◆ 1.**Training**

a) Read the operation and maintenance instructions carefully. Fully familiar with all operating mechanisms and the correct usage of the machine. Grasp how to stop and quickly discrete the control mechanism

b) Never allow children to use the machine. Adults who do not read the manual are not allowed to use the machine

c) Keep the work area free of people especially children and pets

◆ 2.**Preparation**

a) Check the area where the machine will be used and remove all debris out of there.

b) Before starting the engine (motor), disengage the clutch and shifting to neutral

c) Do not operate the machine without proper jackets. Wearing non-slip shoes will improve the stability of standing on slippery surfaces.

d) Dispose the fuel carefully, it is flammable.

1) Use appropriate containers to store fuel.

2) When the engine is running or when it is warming up, it is strictly forbidden to fill the fuel tank with fuel, and it is strictly forbidden to fill the crankcase with lubricating oil.

3) Refueling should be done with great care outdoors, not indoors.

4) Before starting, tighten the fuel tank cap and wipe off the spilled fuel.

e) When the engine is running, no adjustments are allowed (except for special adjustments recommended by the manufacturer).

f) Safety glasses should be worn during any manipulation, such as preparation, operation and maintenance.

◆ 3. **Manipulation**

a) Hands and feet must not be close to rotating parts, moving parts back and forth or placed under rotating parts.

b) Special care should be taken when maneuvering on (or passing through) stone pavements, sidewalks or highways, and be alert to potential hazards,Passengers are not allowed and pay attention to traffic conditions.

c) After hitting debris, stop the engine and check the reaper for damage or not. If damage, should restart and operate the reaper after repaired

d) Always pay attention to your feet to avoid slipping or falling.

e) Once the machine has abnormal vibration, stop the engine immediately to find the cause. Vibration is usually a harbinger of failure.

f) When leaving the operating position, stop the engine before performing maintenance, adjustment , inspection or cleaning the blade jam.

g) When the machine is in an unmanned state, all possible precautions should be taken: disengage the PTO shaft, lower the attachments, engage neutral gear, and stop the engine

h) Before cleaning, repairing or inspecting the machine, the engine should be turned off and all moving parts must be stopped.

i) The exhaust gas from the engine is harmful, do not run indoors.

j) Do not operate the reaper without proper protective devices, protective covers or other protective devices not in position.

k) Keep away from children and pets

l) Do not overload the machine due to large cutting width and fast speed

m) The machine must not run at high speed on slippery roads. Observe the back and be careful when going backwards.

n) Never allow bystanders to approach the machine.

o) Only use attachments and equipment allowed by the reaper manufacturer (i.e wheel weights, counterweights,cab.etc).

p) Do not operate the reaper when the vision or light in the field is poor

q) Be careful when harvesting on hard ground, the blade may hook into the ground and push the reaper forward. If this happens, Release the handle and do not control the machine

r) Do not operate the reaper on steep slopes.

s) When the reaper goes up or down the slope, it should be prevented from tipping.

◆ 4.Repair and storage

a) Keep machines, attachments and equipment in a safe working condition

b) Every once in a while, check whether the shear bolts, engine fixing bolts and other bolts are properly tightened to ensure that the machine is in a safe working state.

c) The machine should be stored indoors and away from sources of ignition, and the engine should be cooled before storing the machine in the room.

d)If the reaper is to be stored for a long time, the user manual should always be kept as important information.

e) Do not repair the machine at will unless you have the appropriate tools and instructions for disassembling, assembling and repairing the machine.

Chapter II Location of Safety Warning Signs

◆ 1.Safety warning signs should be clear and easy to see because they involve personal injury.

◆ 1. When the safety warning sign is missing or unclear, the user can entrust the dealer to contact manufacture. for free, and post it as shown in the figure below before continuing to use the reaper.

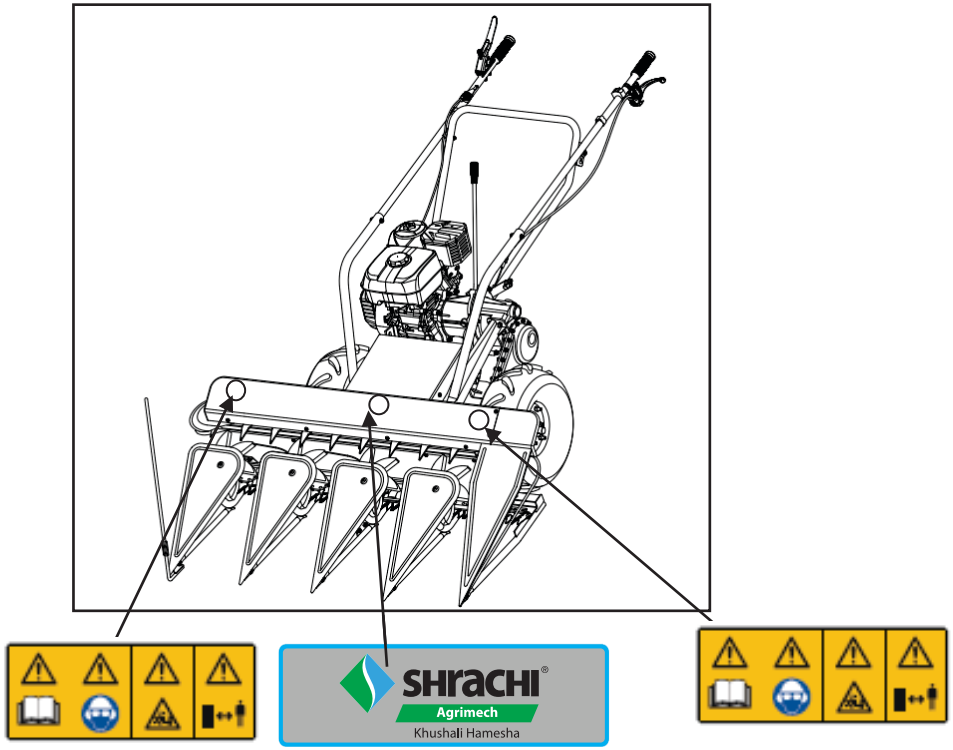

Chapter III, main technical specifications and supporting requirements

◆ 1. Main technical specifications :

ITEM		Design value
MODEL NUMBER		4R-P
STRUCTURE		Front-mounted
ENGINE	MODEL	WM170F/P
	STRUCTURE	4-STROKE, SINGLE CYLINDER, AIR COOLED, DIRECT INJECTION, SPARK IGNITION ENGINE
	RATED POWER(Kw)	4.3
	RATED RPM (r/min)	1750
	STARTING MODE	RECOIL START
	DIMENSION	2390×1470×1250
REAPER	WEIGHT (Kg)	137.5
	TRANMISSION	GEAR+CHAIN
	GEAR SHIFTING	FORWARD，NEUTRAL，REVERSE
	STUB HEIGHT (mm)	120-130
	CUTTING WIDTH (mm)	1200
	FORWARD SPEED (kmph)	3-4
	WORKING EFFICIENCY (ha/h)	0.261
	Fuel consumption	0.95 l/h or 4.32l/ha

Table I

❖ The above specifications may be changed due to improvement, only for reference, not for acceptance.

◆ 2.Supporting requirements :

Engine : WM170F/P single cylinder, OHV, four stroke, forced air cooling; REAPER cutting width ≤120cm

Chapter 4: Unpacking installation steps

◆ 1.STEPS AS BELOW：

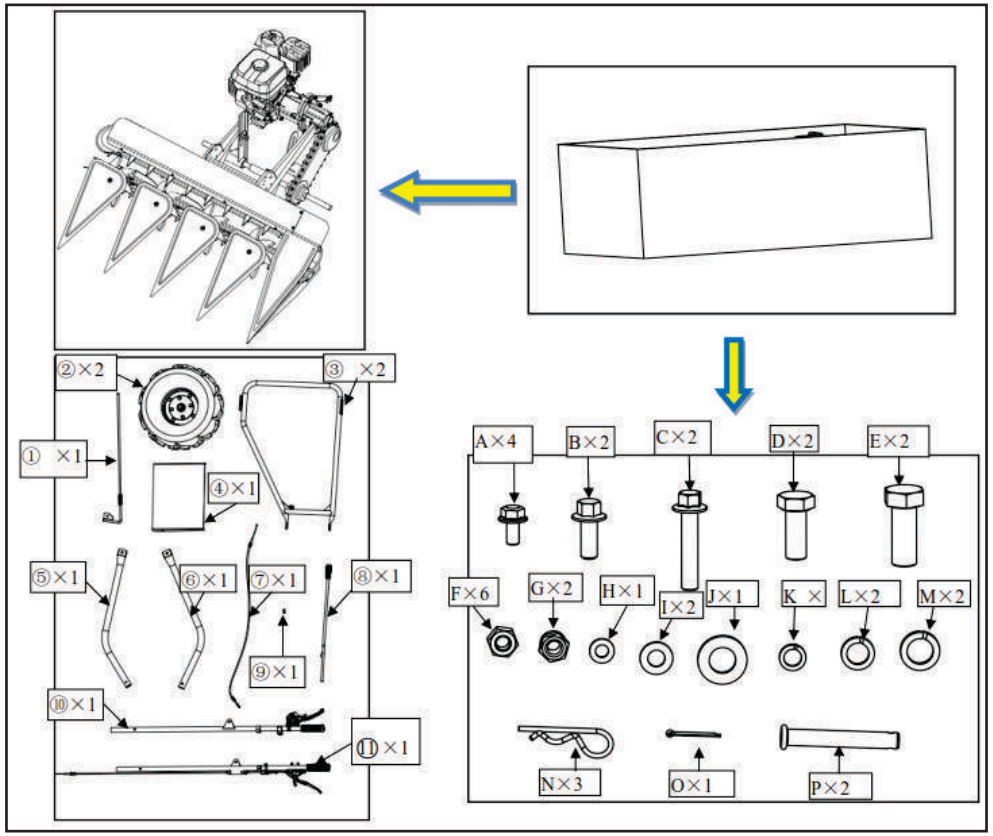

Parts and labels in the box

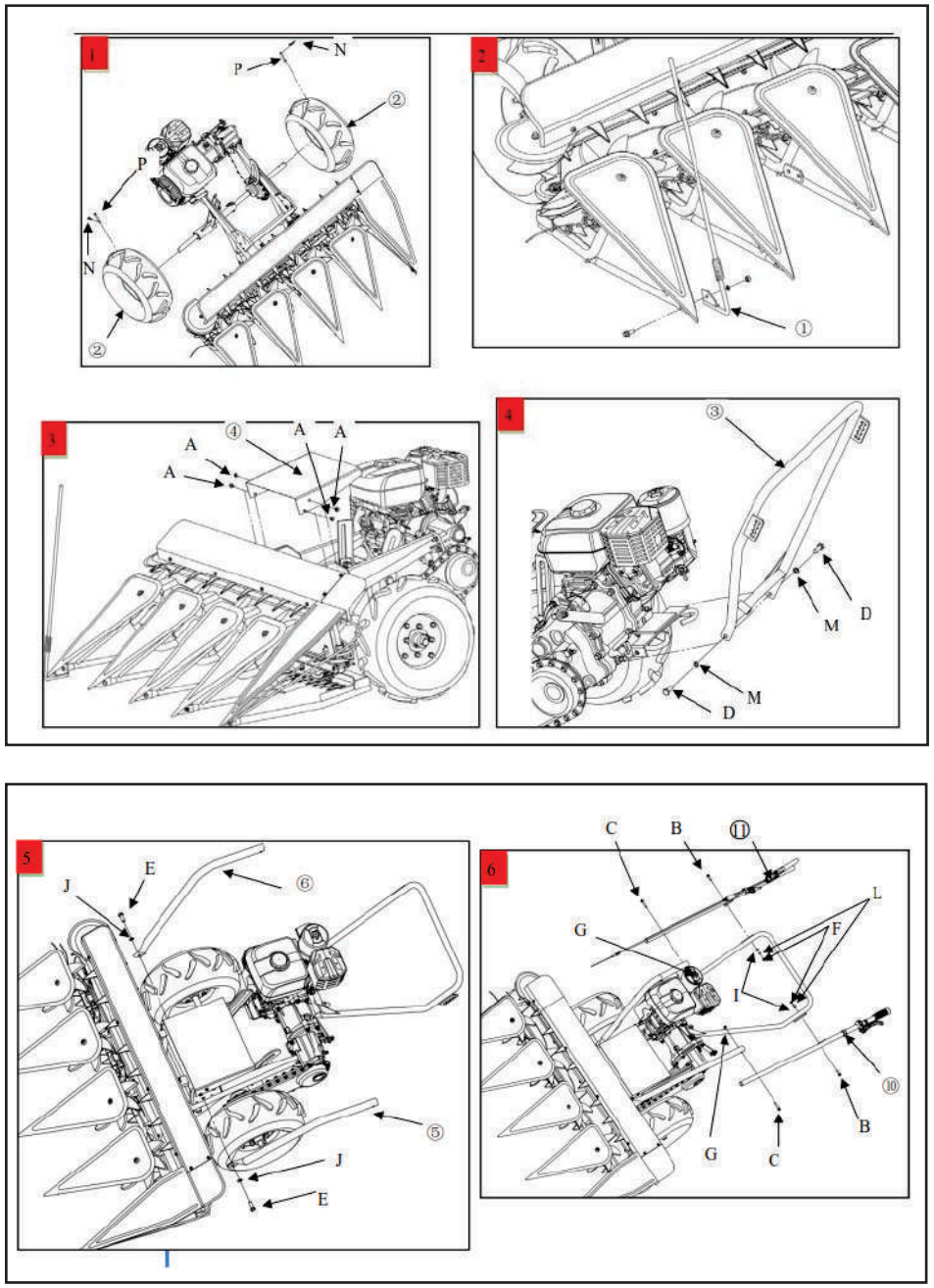

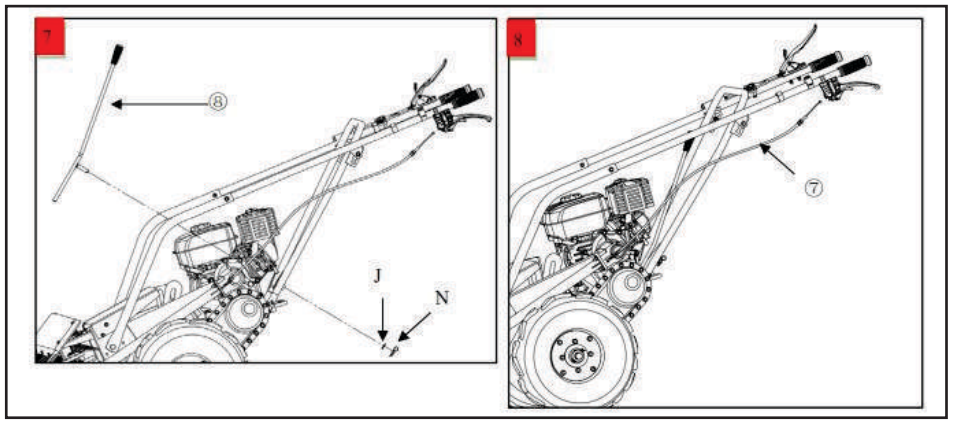

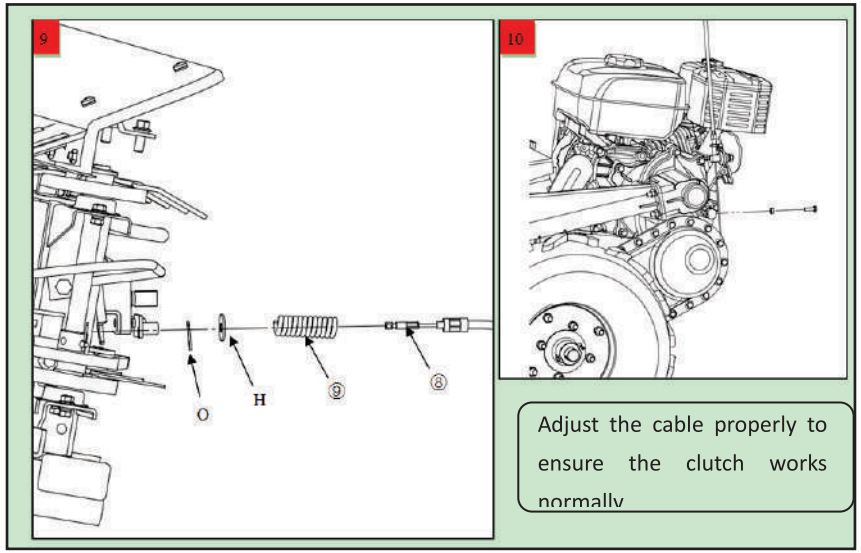

Adjust the cable properly to ensure the clutch works normally

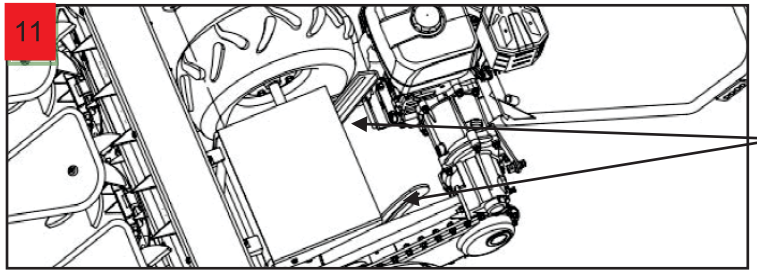

Adjust the height of the handle bar as needed

◆ 1.Schematic :

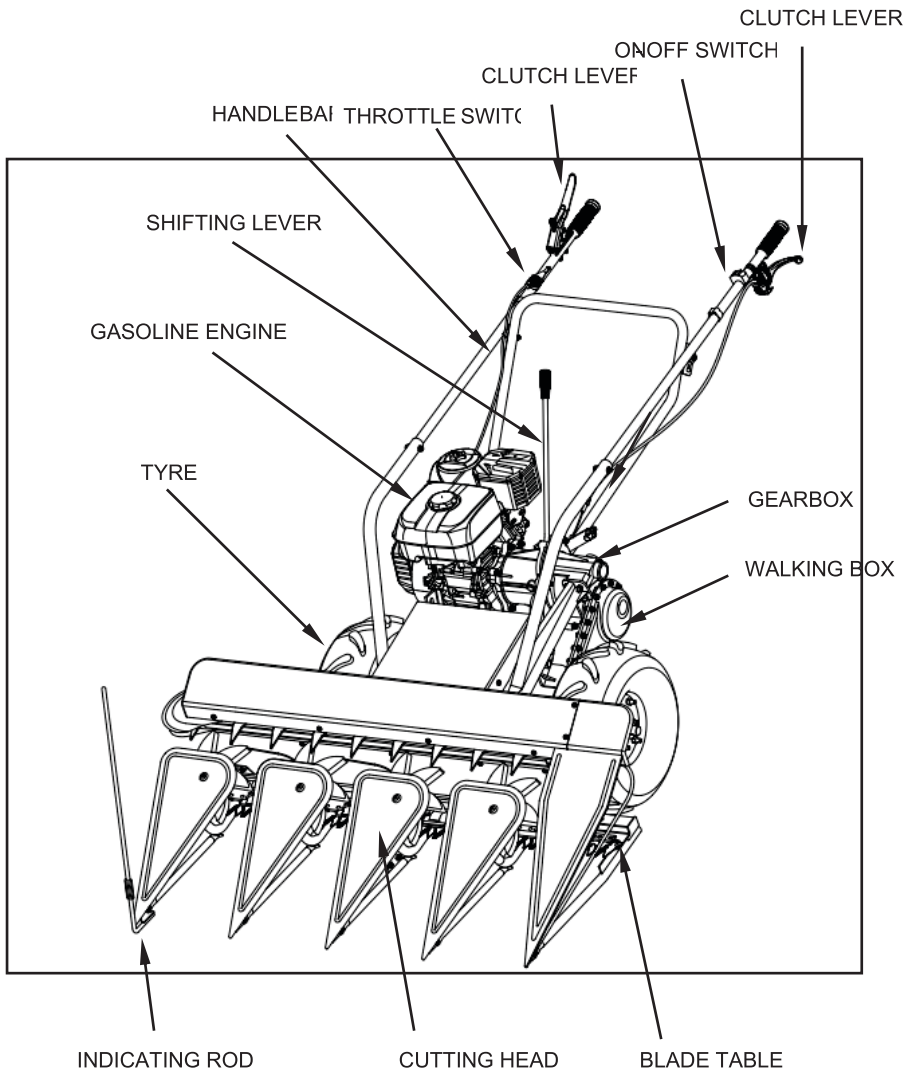

Chapter 5 Operating Instructions

When the reaper leaves the factory, the factory has made routine adjustments, but users should check and adjust each institution before using the machine to harvest, so that the reaper can be better used.

◆ 1. Daily inspection

◇1.1 Check engine oil

> ⚠WARNING
> The normal refueling amount of engine oil is 0.6L. When the engine oil level is lower than normal, using the engine will cause serious damage to the engine

●Place the engine in a horizontal position.

●Unscrew the engine oil dipstick and wipe the oil dipstick clean.

●Insert the oil dipstick into the oil filling hole (no need to turn).

●Take out the dipstick and check the oil level. The oil level is normal within the marked range of the dipstick.

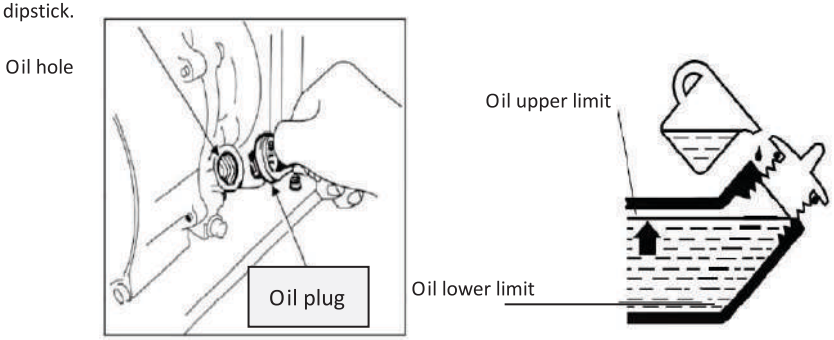

Warning: SAE10W-30 is the recommended general-purpose engine lubricant at common temperatures. When the average temperature in your area is within the range shown in the chart, other viscosity lubricants can be used.

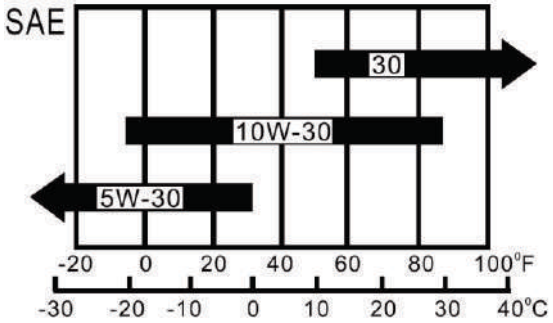

◇ 1.2 Check gearbox oil

●Place the reaper on level ground and unscrew the oil plug.

●The normal oil level is 1.0L, and the normal oil level is at the lower edge of the oil injection hole. If the oil level is too low, add oil to the normal oil level.

●The recommended oil grade is SAE10W-30.

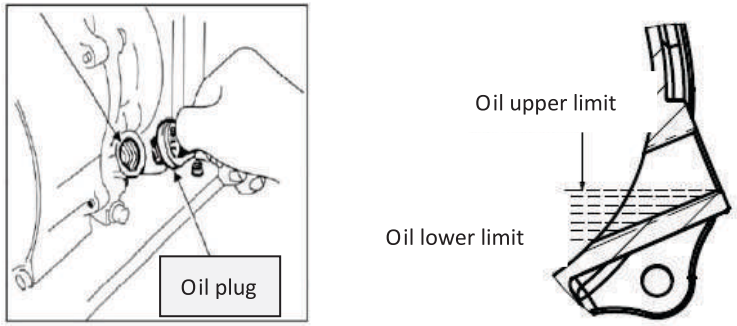

◇ 1.3 Check air filter

When using for the first time, the air filter cover should be removed and the engine oil should be filled to the oil level.

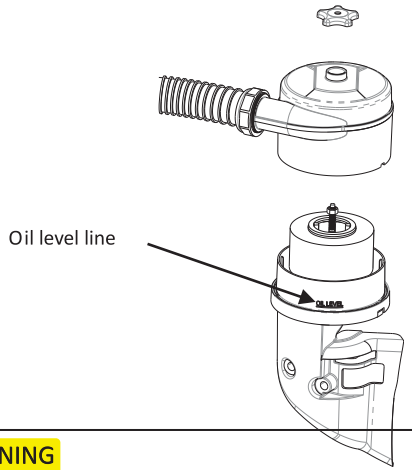

> ⚠WARNING
> A dirty air filter restricts the flow of air into the carburetor, reducing engine performance.
> Never run the engine without an air filter, otherwise it will accelerate engine wear.
> Check the air filter element to make sure it is clean and intact. If necessary, clean or replace.

◆ 2.Start up steps

◇ 1.1 Turn the fuel valve to the "ON" position

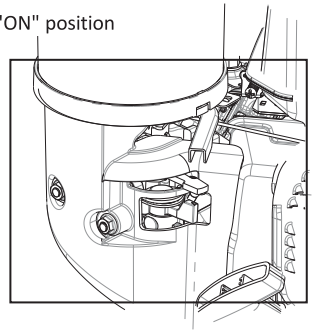

◇ 1.2 Turn the choke lever to the "CLOSE" position

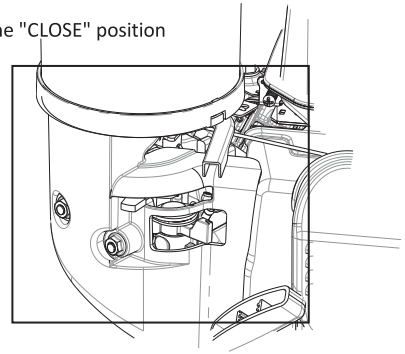

◇ 1.3 Turn the remote throttle switch

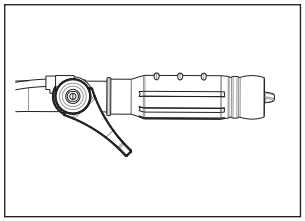

◆ 3. Factory debugging standard

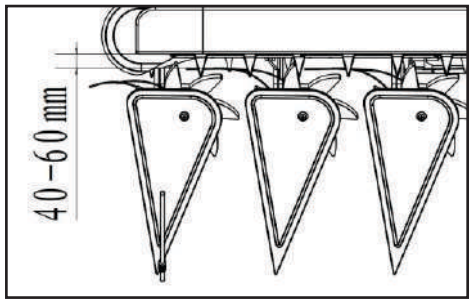

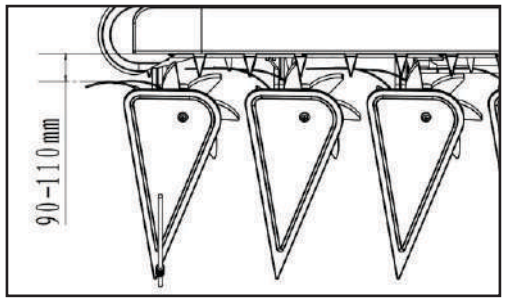

The steel wire debugging of the three middle hoe devices: the distance between the upper and lower steel wires to the panel is 40 ~ 60mm.	**The steel wire debugging of the outermost supporter: the distance between the upper and lower steel wires to the panel is 90 ~ 110mm.**

When using this machine, the steel wire of the supporter should be adjusted appropriately according to the thickness and tightness of the crop. When it is thick, the distance between the steel wire and the panel should be widened until it is not caught and neatly placed.

Note:

1. The chain and cutter should be lubricated and protected before each use and after storage in each season.
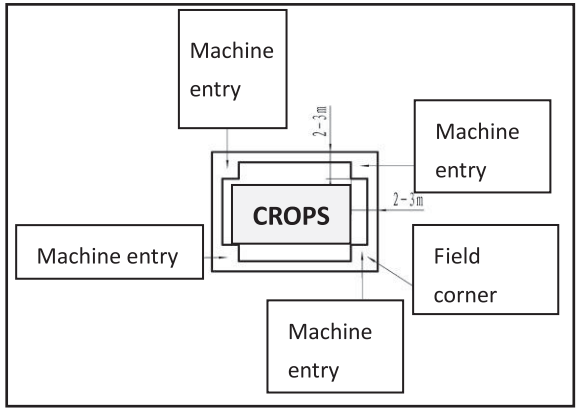
2. Before harvesting, be sure to manually cut the four corners and four sides of the harvest field (such as the rice pond), as long as the machine works in the pond without affecting the leveling (two to three meters on each side of the four corners, and five on all sides) (Ten to sixty centimeters).